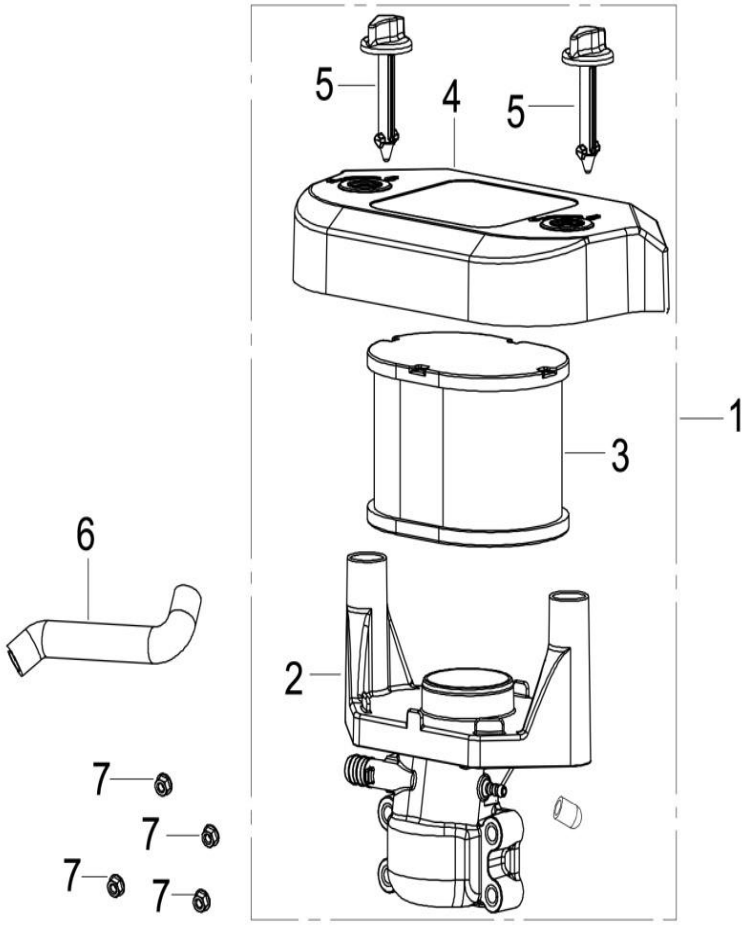

Air Cleaner

No.	Part No.	Description	Reqd. QTY
1	180010123-0002	Air filter	1
2	180280118-0001	Air filter seat	1
3	180100109-0001	Air filter element combination	1
4	180070255-0001	Air filter casing cover	1
5	180270011-0001	Lock bolt for air filter cover	2
6	380740632-0002	Breather tube	1
7	380370066-0001	Hexagon nut with flange	4

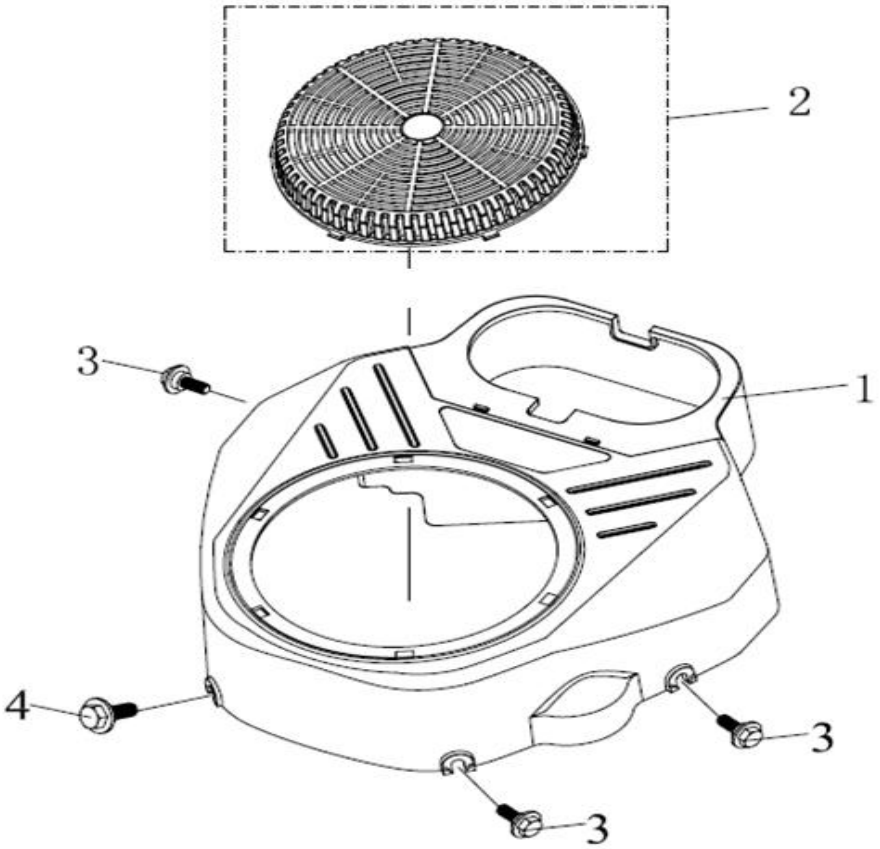

Blower Housing

No.	Part No.	Description	Reqd. QTY
1	160210044-0001	Fan cover comp.	1
2	195360010-0003	Starter outer cover	1
3	380020086-0001	Hexagon shaft shoulder bolt	3
4	380020087-0001	Hexagon shaft shoulder bolt	1

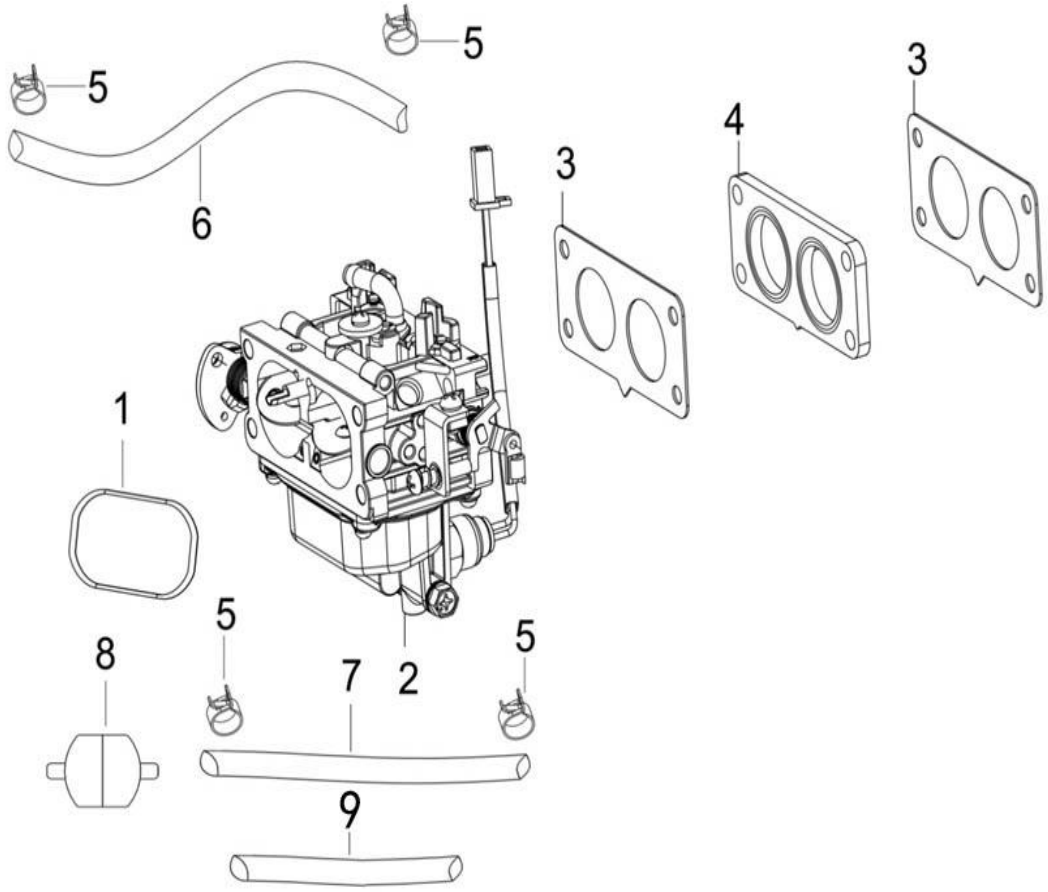

Carburetor

No.	Part No.	Description	Reqd. QTY
1	380841074-0001	Seal ring	1
2	170022432-0001	Carburetor	1
3	170430107-0001	Carburetor gasket	2
4	170440073-0001	Heat insulating pad for carburetor	1
5	380960287-0001	Clip combination	4
6	380751120-0002	Oil tube	1
7	380750596-0001	Oil tube	1
8	170010045-0001	Fuel filter	1
9	380770343-0001	Protective sleeve	1

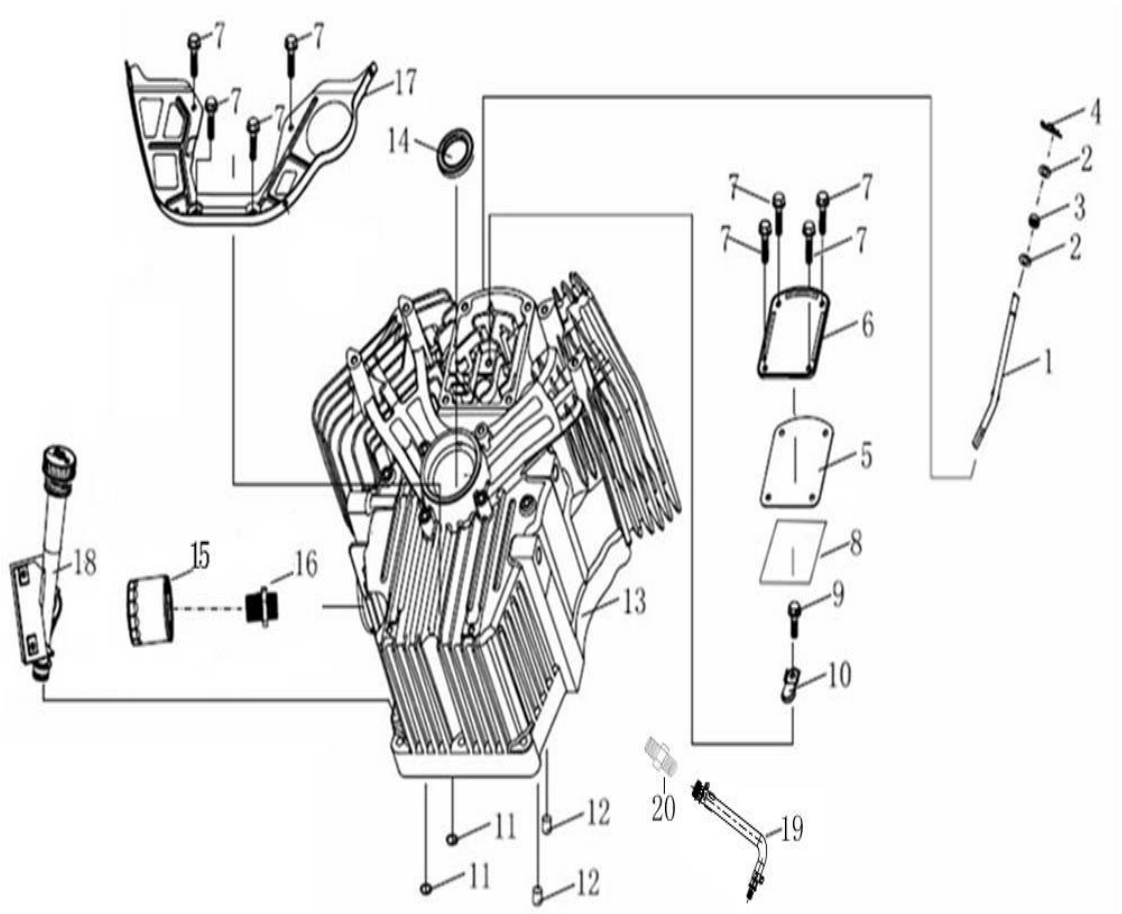

Crankcase

No.	Part No.	Description	Reqd. QTY
15	150350046-0002	Oil filter	1
16	150840002-0002	Oil filter Mounting bolts	1
17	160200061-0001	Side plate	1
18	110690043-0001	Oil rule combination	1
19	292980115-0001	tube comp.	1
20	110950004-0001	Joint of extension bar for blee	1

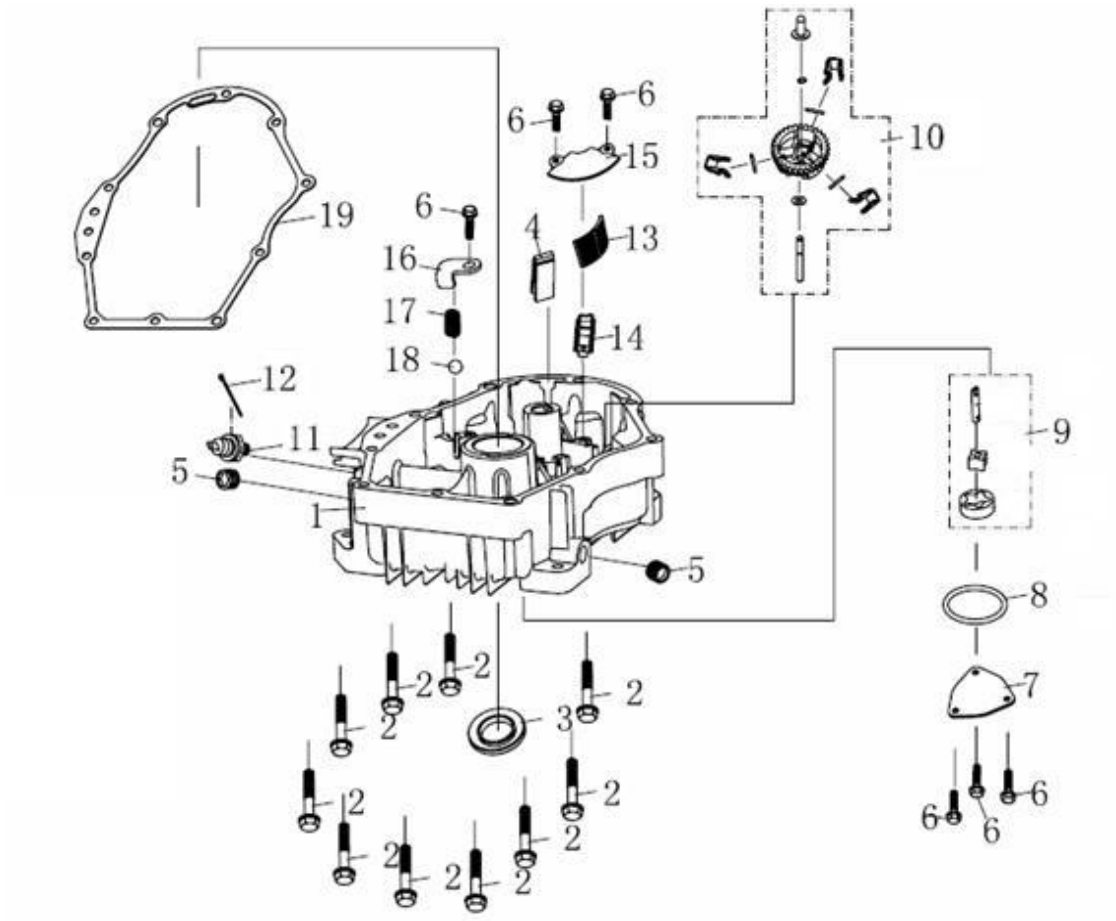

Crankcase Cover

No.	Part No.	Description	Reqd. QTY
15	150340012-0001	Cover,Oil Strainer	1
16	120530006-0001	Pressing plate for oil groove	1
17	381150437-0001	Compression spring	1
18	380640016-0001	Steel ball	1
19	110830034-0001	Crankcase cover gasket	1

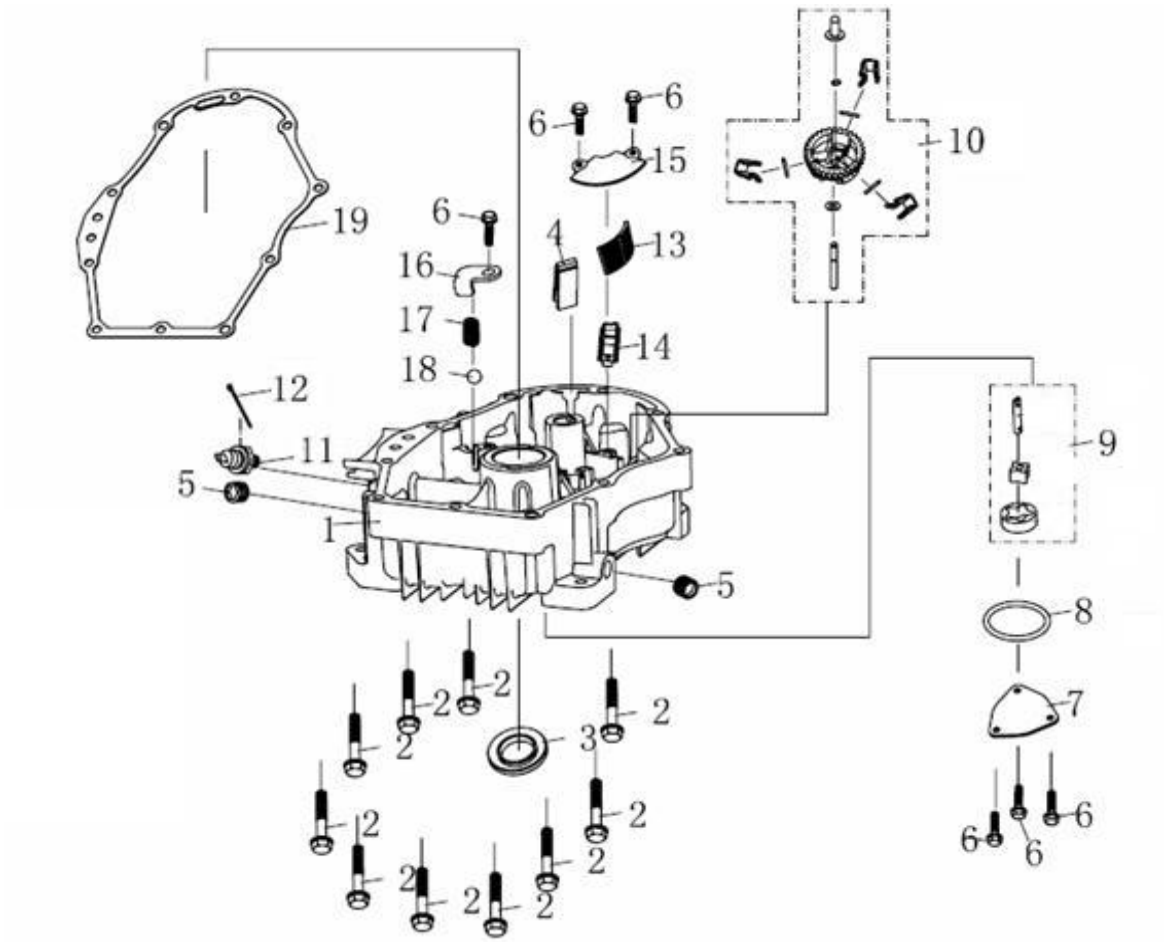

Crankcase Cover

No.	Part No.	Description	Reqd. QTY
1	110820172-0001	Crankcase cover	1
2	380140338-0001	Hexagon bolt with flange	10
3	380650436-0001	Oil seal	1
4	150570003-0001	Engine oil return block	1
5	110260088-0002	Sealing plug screw	2
6	380140013-0005	Hexagon bolt with flange	6
7	150040025-0001	Oil pump cover	1
8	380841159-0002	Seal ring	1
9	150010084-0001	Components of oil pump	1
10	171750053-0001	Components of governor gear	1
11	283690002-0001	Oil level alarm	1
12	380900062-0001	Strap	1
13	150290019-0001	Engine oil Strainer	1
14	120530005-0001	Pressing plate for oil groove	1

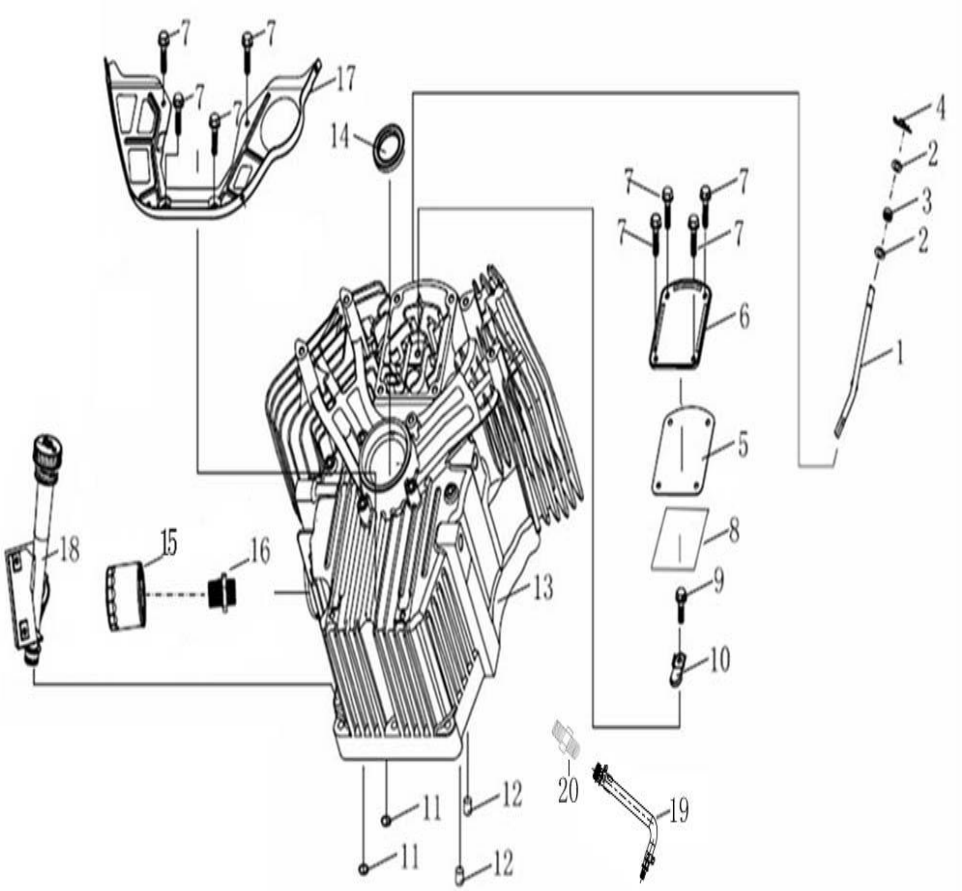

Crankcase

No.	Part No.	Description	Reqd. QTY
1	171630013-0001	Speed regulating arm	1
2	380450559-0001	Flat washer	2
3	380650339-0001	Oil seal	1
4	381350004-0001	Pin clip	1
5	110850012-0001	PACKING，BREATHER CHAM	1
6	110840013-0001	CAP,BREATHER CHAMBER	1
7	380140013-0005	Hexagon bolt with flange	8
8	174560002-0001	Filter block	1
9	380140067-0003	Hexagon bolt with flange	1
10	140250008-0001	Leaf valve	1
11	380840443-0001	Seal ring	2
12	380600123-0001	ocation pin	2
13	110810095-0001	Crankcase body	1
14	380650337-0001	Oil seal	1

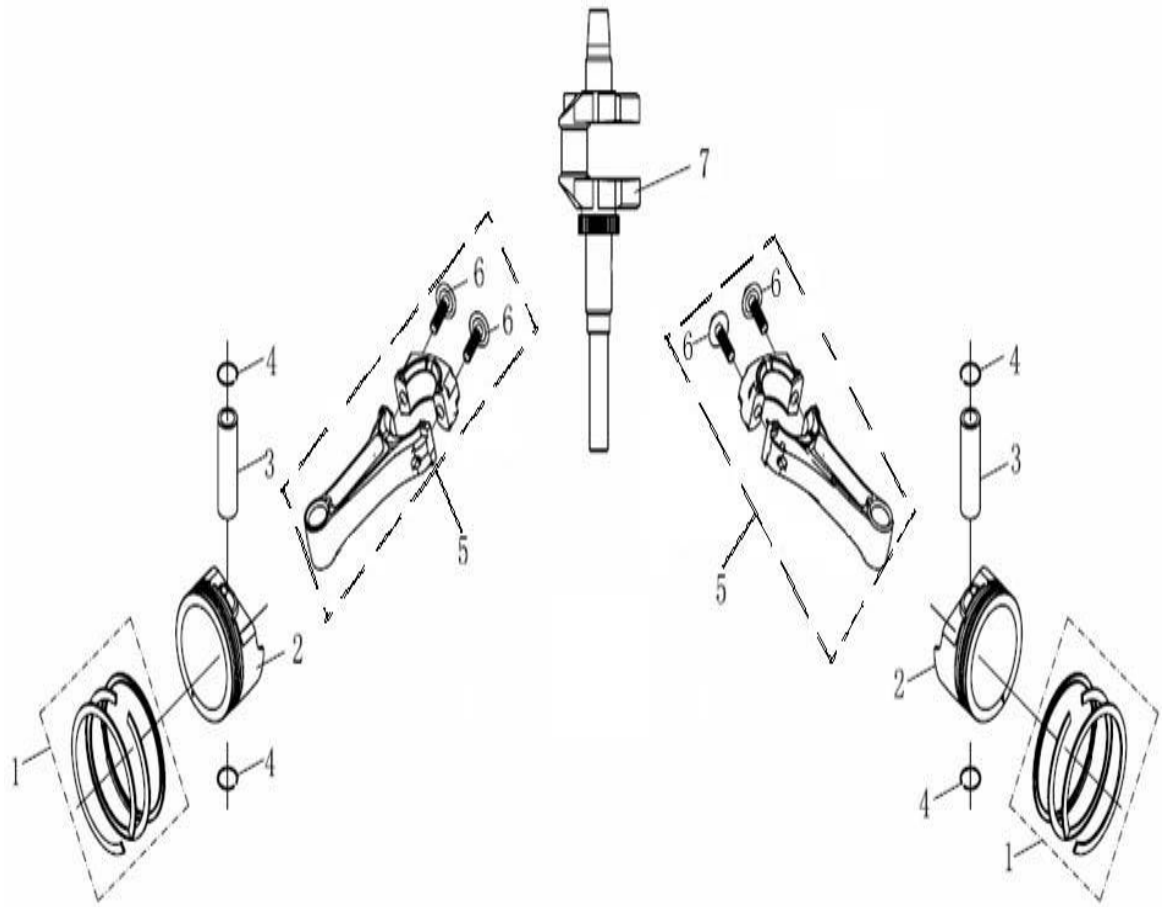

Crankshaft/Piston

No.	Part No.	Description	Reqd. QTY
1	130070157-0001	Piston ring combination	2
2	130030226-0001	Piston	2
3	130060054-0001	Piston pin	2
4	380560078-0001	Steel cable baffle ring	4
5	130150073-0001	Connecting rod	2
6	130180010-T390	Connecting rod bolt	4
7	130290226-0001	crankshaft	1

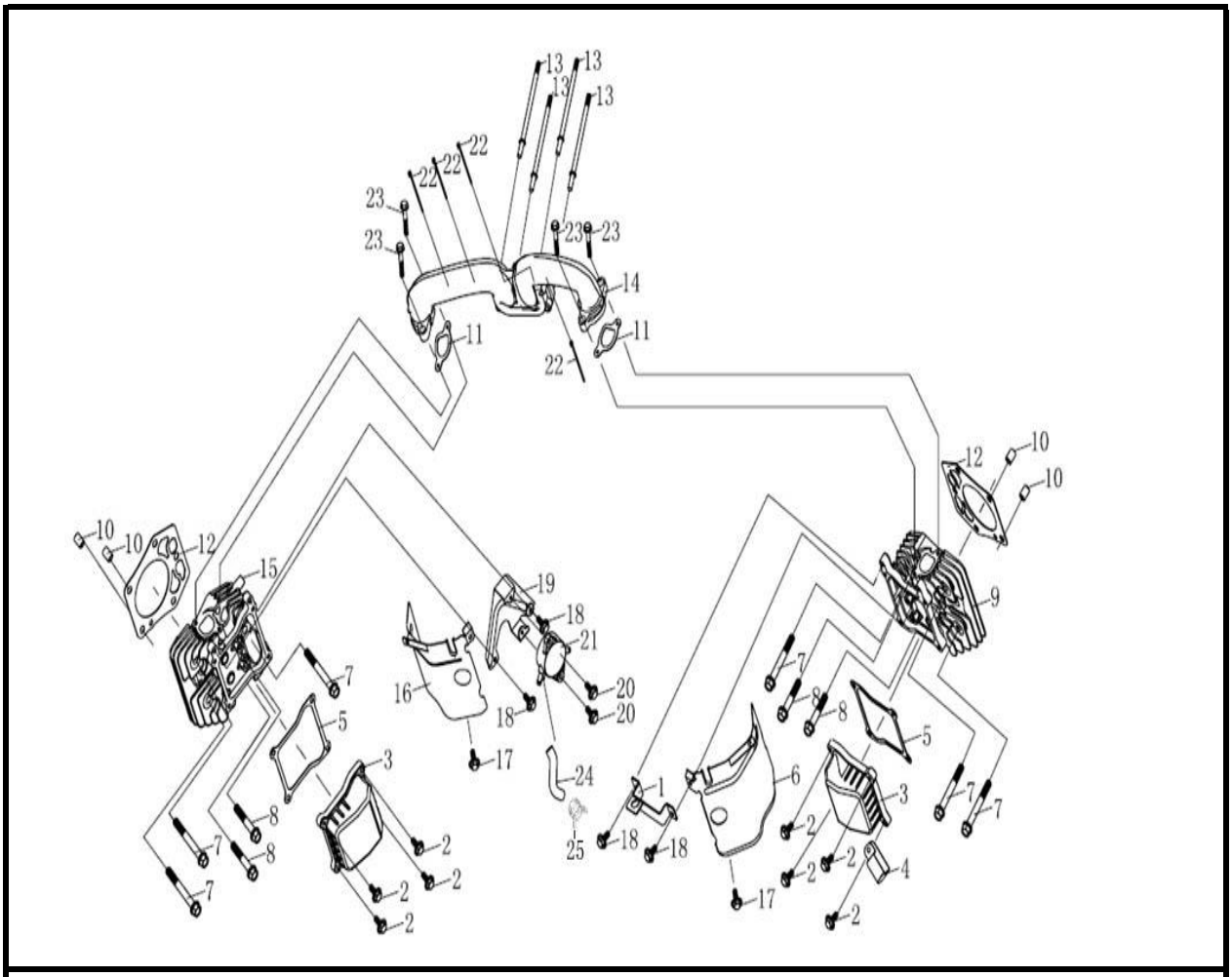

Cylinder Head

No.	Part No.	Description	Reqd. QTY
14	180420647-0001	Intake pipe	1
15	120080742-0001	Cylinder head	1
16	160190037-0001	air deflector	1
17	380140067-0003	Hexagon bolt with flange	2
18	380140013-0005	Hexagon bolt with flange	4
19	170470006-0001	Gasoline pump bracket	1
20	380140103-0004	Hexagon bolt with flange	2
21	170460026-0001	Gasoline pump	1
22	380900062-0001	Strap	4
23	380140100-0003	Hexagon bolt with flange	4
24	380740633-0002	Breather tube	1
25	380960120-0004	Clip combination	1

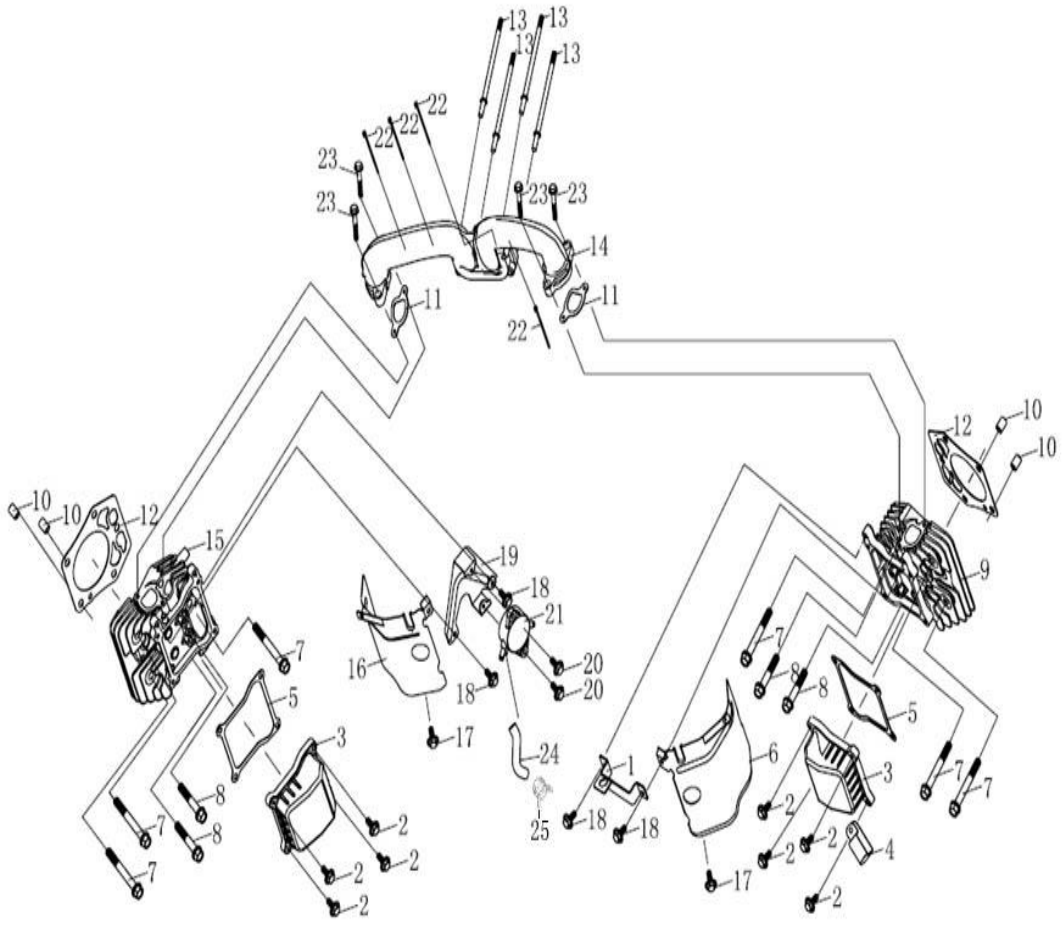

Cylinder Head

No.	Part No.	Description	Reqd. QTY
1	120550003-0001	Lifting eye	1
2	380140103-0004	Hexagon bolt with flange	8
3	120220025-0001	Cylinder head cover assy	2
4	380940461-0001	Cable cleat	1
5	120250061-0001	Gasket for cylinder head cov	2
6	160190036-0001	air deflector	1
7	380140455-0001	Hexagon bolt with flange	6
8	380140456-0001	Hexagon bolt with flange	4
9	120080741-0001	Cylinder head	1
10	380600129-0001	ocation pin	4
11	170430106-0001	Carburetor gasket	2
12	120150288-0001	Gasket for cylinder head	2
13	380180116-0001	Stud	4

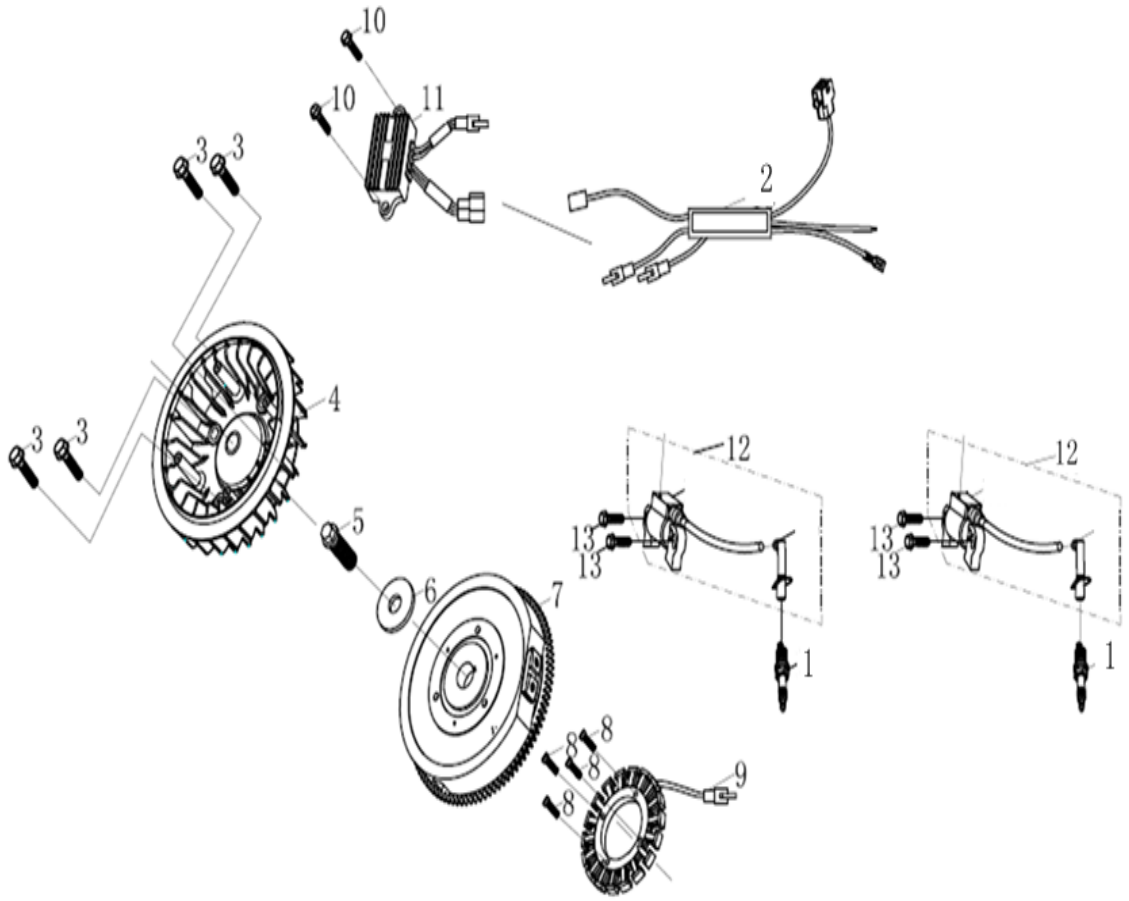

Flywheel/Coil Assy

No.	Part No.	Description	Reqd. QTY
1	270960046-0001	Spark plug	2
2	271280133-0001	Connecting wire	1
3	380140451-0001	Hexagon bolt with flange	4
4	160180020-0001	Impeller	1
5	380140457-0001	Hexagon bolt with flange	1
6	380450702-0001	Flat washer	1
7	270020290-0001	FLYWHEEL COMP	1
8	380190039-0005	Socket head screw	4
9	270190054-0001	Components of charging cu	1
10	380140013-0005	Hexagon bolt with flange	2
11	271930021-0001	Rectifier	1
12	270920354-0002	COIL ASSY.,IGNNTION	1
13	380140077-0005	Hexagon bolt with flange	4

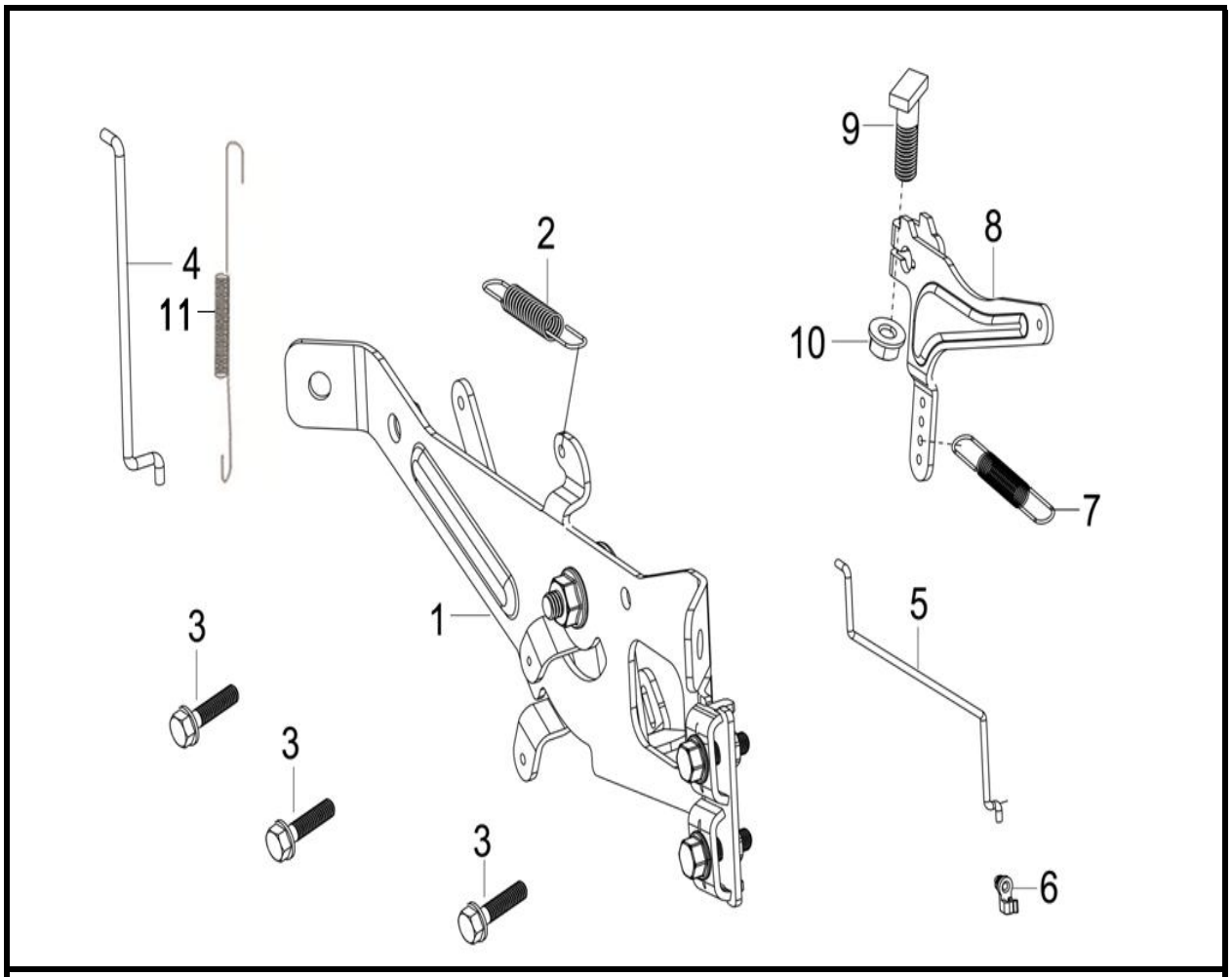

Governor

No.	Part No.	Description	Reqd. QTY
1	171680144-0001	Throttle handle combinatior	1
2	171610028-0001	throttle return spring	1
3	380140013-0005	Hexagon bolt with flange	3
4	171590040-0001	Throttle rod	1
5	171650036-0001	Choke valve pull rod	1
6	173090003-0001	Locker of choke valve pull r	1
7	171600111-0001	Governing spring	1
8	171620068-0001	Speed regulating bracket	1
9	380250002-0001	Square head set screw with	1
10	380370066-0001	Hexagon nut with flange	1
11	171610038-0001	throttle return spring	1

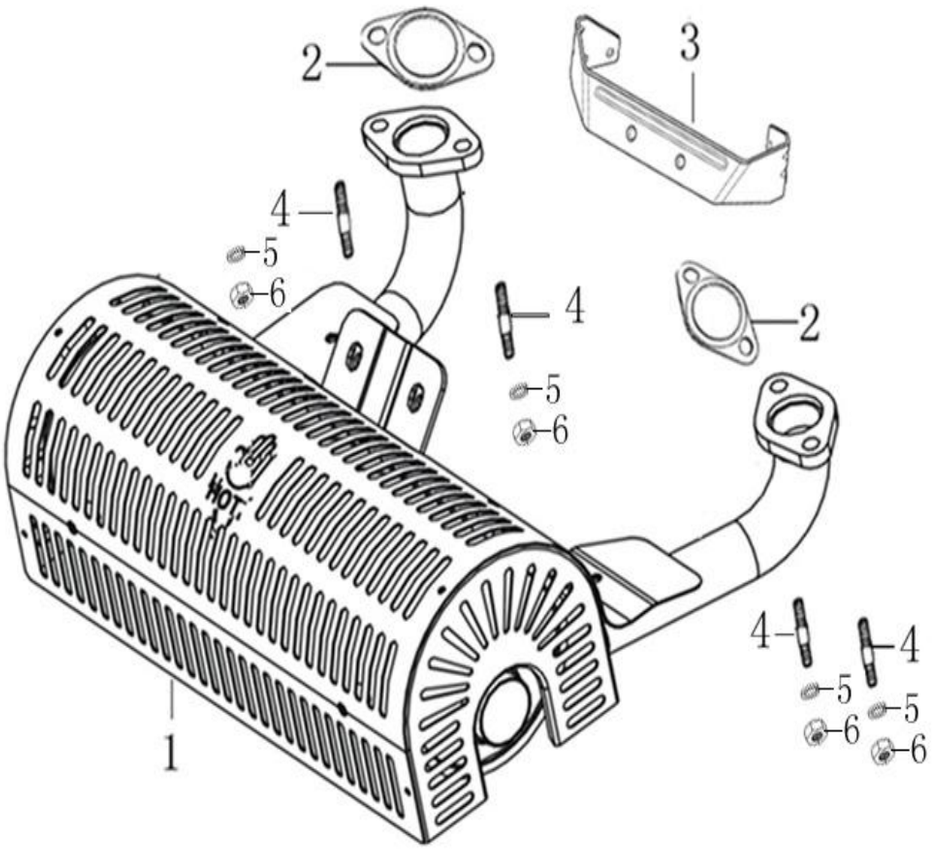

MUFFLER ASSY

No.	Part No.	Description	Reqd. QTY
1	180571314-0001	Muffler	1
2	180650074-0001	Outlet gasket	2
3	180990115-0001	Muffler bracket	1
4	380180109-0001	Stud	4
5	380460001-0006	Elastic washer	4
6	380340005-0005	Hexagon nut	4

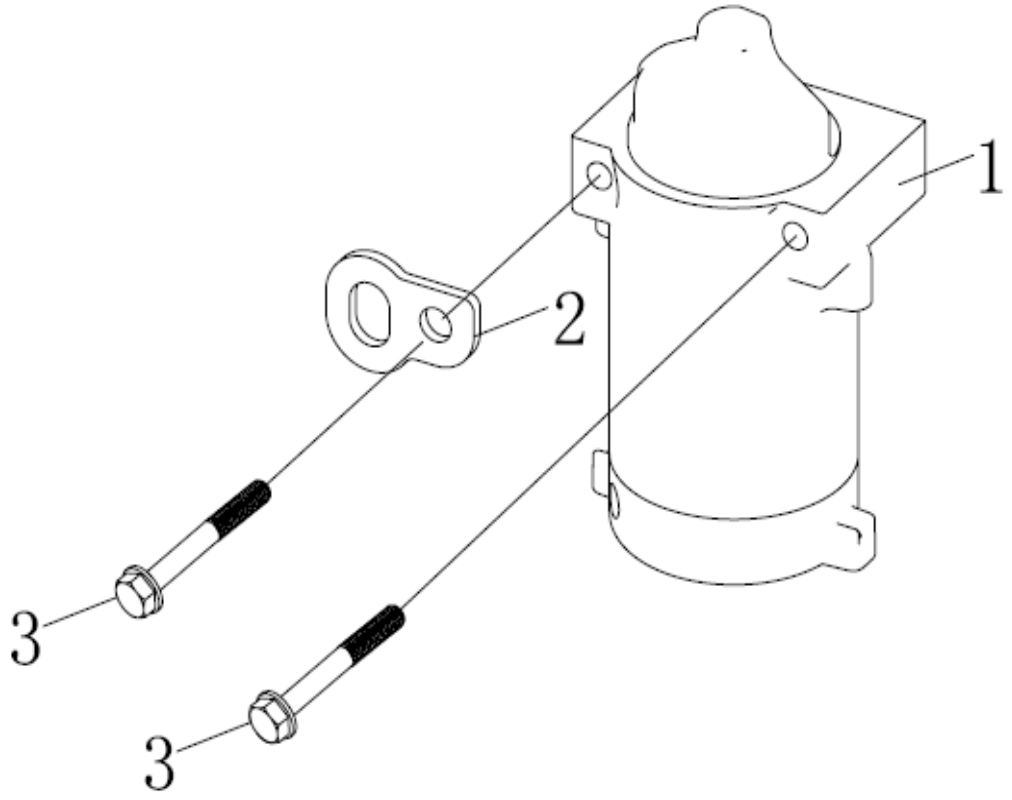

Starting Motor

No.	Part No.	Description	Reqd. QTY
1	270360170-0001	Components of starting moto	1
2	120550002-0001	Lifting eye	1
3	380140453-0001	Hexagon bolt with flange	2

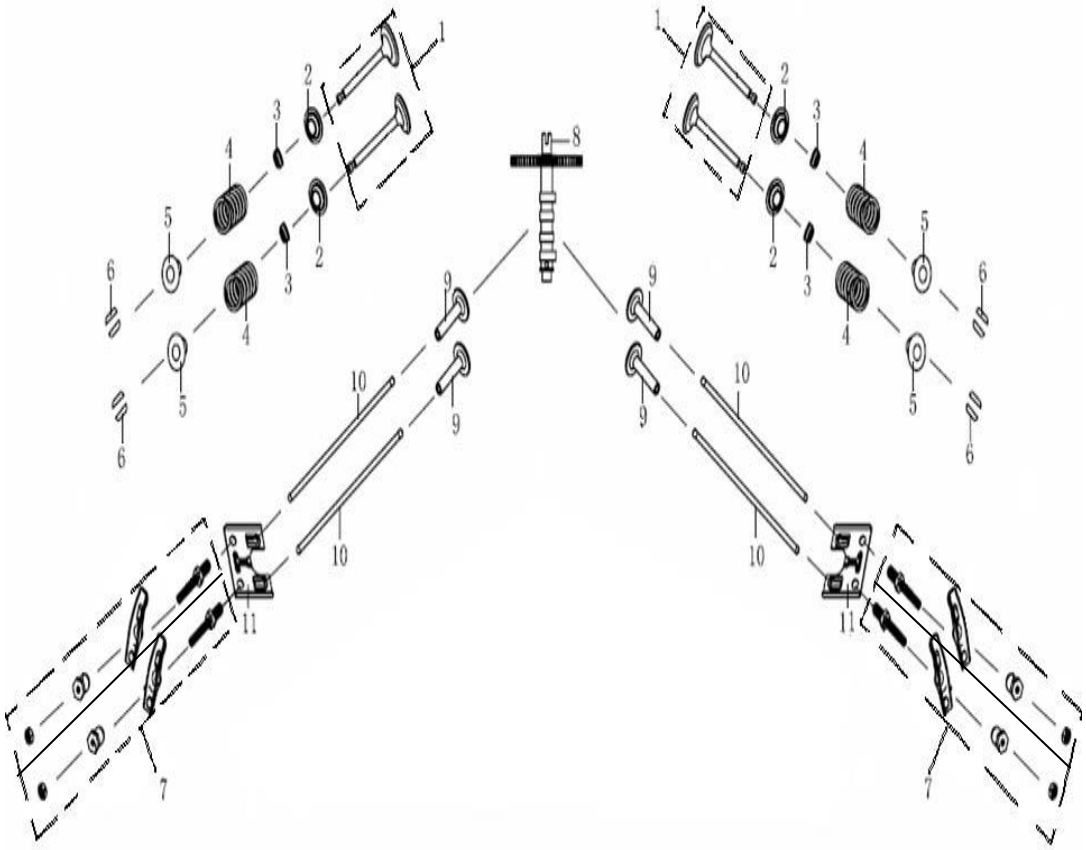

Valve

No.	Part No.	Description	Reqd. QTY
1	500550037-0001	Valve Kit	2
2	140360010-0001	Seat, valve spring	4
3	140400012-0001	Valve oil seal	4
4	140340025-0001	Inner spring of valve	4
5	140380021-0001	Retainer, valve spring	4
6	140390015-0001	Valve locker	8
7	140450035-0002	Valve rocker combination	4
8	140020130-0001	Camshaft assy	1
9	140690017-0001	Lifter, Valve	4
10	140670037-0001	Push rod	4
11	140710014-0001	Plate, push rod guide	2